UNIVERSITY OF CAMBRIDGE INTERNATIONAL EXAMINATIONS
General Certificate of Education
Advanced Subsidiary Level and Advanced Level

CANDIDATE NAME	
CENTRE NUMBER	
CANDIDATE NUMBER	

0687257484

PHYSICS **9702/31**

Paper 31 Advanced Practical Skills 1 **October/November 2008**

2 hours

Candidates answer on the Question Paper.

Additional Materials: As listed in the Confidential Instructions.

READ THESE INSTRUCTIONS FIRST

Write your Centre number, candidate number and name on all the work you hand in.
Write in dark blue or black pen.
You may use a soft pencil for any diagrams, graphs or rough working.
Do not use staples, paper clips, highlighters, glue or correction fluid.
DO **NOT** WRITE IN ANY BARCODES.

Answer **both** questions.
You will be allowed to work with the apparatus for a maximum of one hour for each question.
You are expected to record all your observations as soon as these observations are made, and to plan the presentation of the records so that it is not necessary to make a fair copy of them. The working of the answers is to be handed in.
Additional answer paper and graph paper should be submitted only if it becomes necessary to do so.
You are reminded of the need for good English and clear presentation in your answers.

At the end of the examination, fasten all your work securely together.
All questions in this paper carry equal marks.

For Examiner's Use	
1	
2	
Total	

This document consists of **10** printed pages and **2** blank pages.

© UCLES 2008

You may not need to use all of the materials provided.

For Examiner's Use

1 In this experiment you will observe the motion of two simple pendulums, and measure the interval between successive times at which the pendulums are moving together.
You will investigate how this time interval is affected when the length of one of the pendulums is changed.

(a) Set up two simple pendulums side by side as shown in Fig. 1.1, with each string clamped between two wooden blocks.

Set the length of pendulum A to about 0.65 m.

Pendulum A should be left at its set length throughout the experiment.

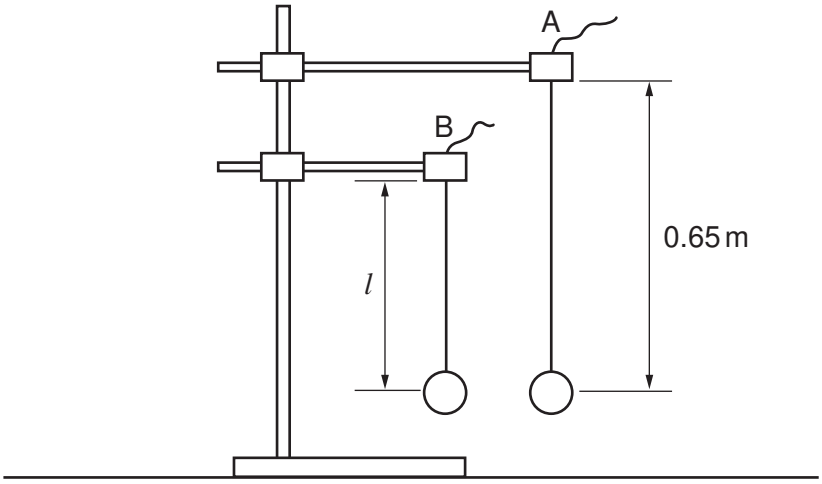

Fig. 1.1

(b) Adjust pendulum B so that its length l is about 0.5 m.

Measure and record the value of l.

l = ...m

(c) Set both pendulums into motion with small oscillations.

For Examiner's Use

Start the stopwatch when the two pendulums are lined up as shown in Fig. 1.2 **and** are moving in the same direction.

side view

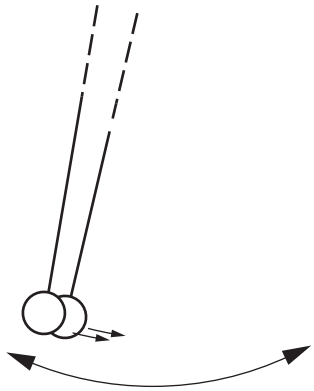

Fig. 1.2

Determine the time *t* that elapses before the next occasion when the two pendulums are lined up **and** moving in the same direction.

t = ... s

(d) Change l and repeat **(c)** until you have six sets of values for l and t.

l should be from about 0.3 m to about 0.6 m. Include values of $\frac{1}{t}$ and $\frac{1}{\sqrt{l}}$ in your table of results.

For Examiner's Use

(e) Plot a graph of $\frac{1}{t}$ on the y-axis against $\frac{1}{\sqrt{l}}$ on the x-axis and draw the line of best fit.

(f) Determine the gradient and y-intercept of this line.

gradient = ...

y-intercept = ...

© UCLES 2008

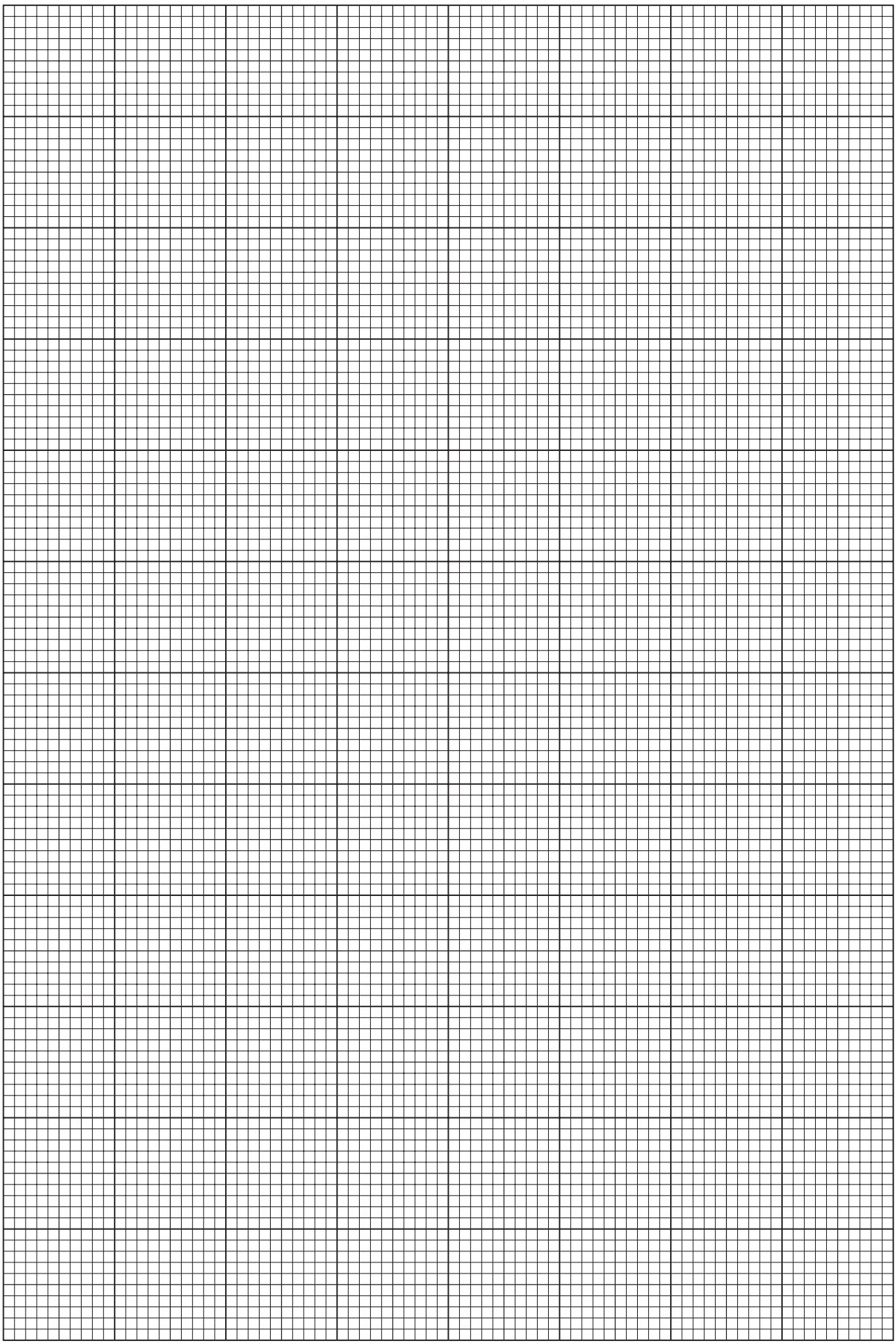

For Examiner's Use

© UCLES 2008

[Turn over

(g) The equation relating t and l is

$$\frac{1}{t} = \frac{p}{\sqrt{l}} - \frac{p}{q}$$

where p and q are constants.

Use your answer from **(f)** to determine a value for p.

For Examiner's Use

p = ...$m^{\frac{1}{2}}s^{-1}$

(h) Use your answers from **(f)** and **(g)** to determine a value for q.

q = ...$m^{\frac{1}{2}}$

You may not need to use all of the materials provided.

For Examiner's Use

2 In this experiment you will investigate the resistance of a wire coil.

(a) You have been provided with a coil as shown in Fig. 2.1.

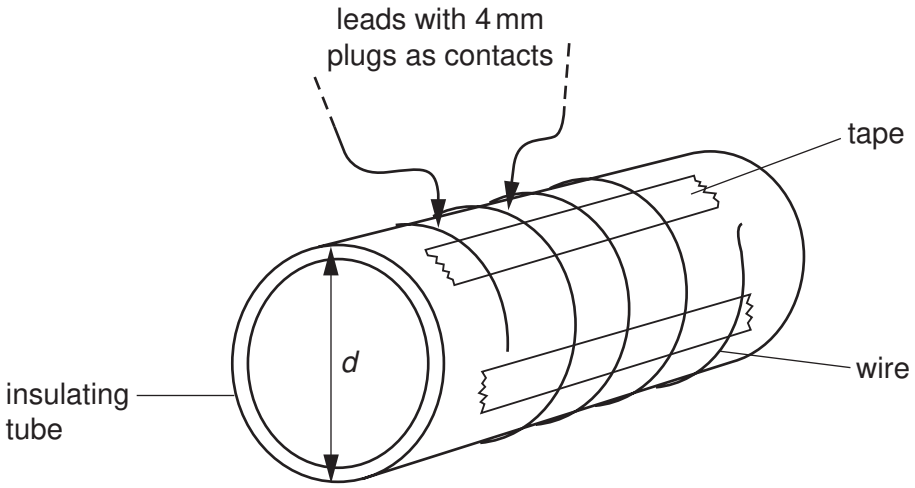

Fig. 2.1

(i) Measure and record the diameter *d* of the insulating tube.

d = ...m

(ii) Estimate the percentage uncertainty in your value for *d*.

percentage uncertainty = ...

(iii) Use your value from **(i)** to estimate the length *x* of wire in a single turn.

x = ...m

(b) Set up the circuit as shown in Fig. 2.2, and hold the contacts against two positions on the coil.

For Examiner's Use

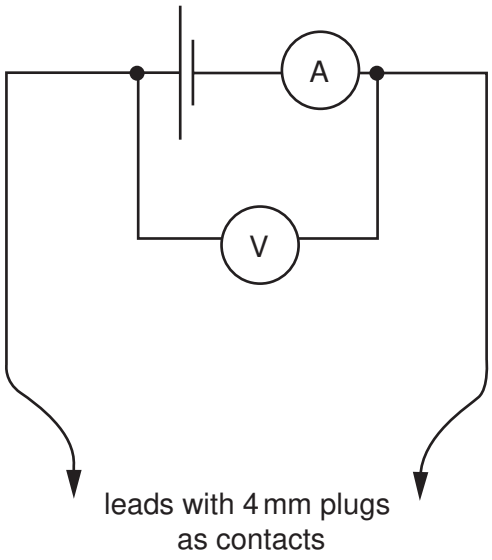

Fig. 2.2

(c) **(i)** Measure and record the number n of turns between the contacts, voltage V and current I.

n = ...

V = ...

I = ...

(ii) Determine the resistance R between the contacts.

R = ...

(iii) The resistance per metre μ of the wire is given by

$$\mu = \frac{R}{x\,n}$$

Use your results to determine a value for μ.

μ = ...

© UCLES 2008

(d) Repeat **(c)** for a different value of n.

For Examiner's Use

n = ...

V = ...

I = ...

R = ...

μ = ...

(e) Explain whether your results support the idea that R is proportional to n.

.....

.....

.....

.....

.....

(f) **(i)** State four sources of error or limitations of the procedure in this experiment.

For Examiner's Use

1. .....

.....

2. .....

.....

3. .....

.....

4. .....

.....

(ii) Suggest four improvements that could be made to the experiment. You may suggest the use of other apparatus or different procedures.

1. .....

.....

2. .....

.....

3. .....

.....

4. .....

.....

© UCLES 2008

BLANK PAGE

BLANK PAGE

Permission to reproduce items where third-party owned material protected by copyright is included has been sought and cleared where possible. Every reasonable effort has been made by the publisher (UCLES) to trace copyright holders, but if any items requiring clearance have unwittingly been included, the publisher will be pleased to make amends at the earliest possible opportunity.

University of Cambridge International Examinations is part of the Cambridge Assessment Group. Cambridge Assessment is the brand name of University of Cambridge Local Examinations Syndicate (UCLES), which is itself a department of the University of Cambridge.